162ND ST
METCALF AVE
1 inch = 100 feet

FINAL DEVELOPMENT PLAN
MASON & HANGER
PARKING LOT EXPANSION
7270 W 162ND STREET

NE $\frac{1}{4}$, SEC 18, TWP 14 S, RNG 25 E
STILWELL, JOHNSON COUNTY, KANSAS

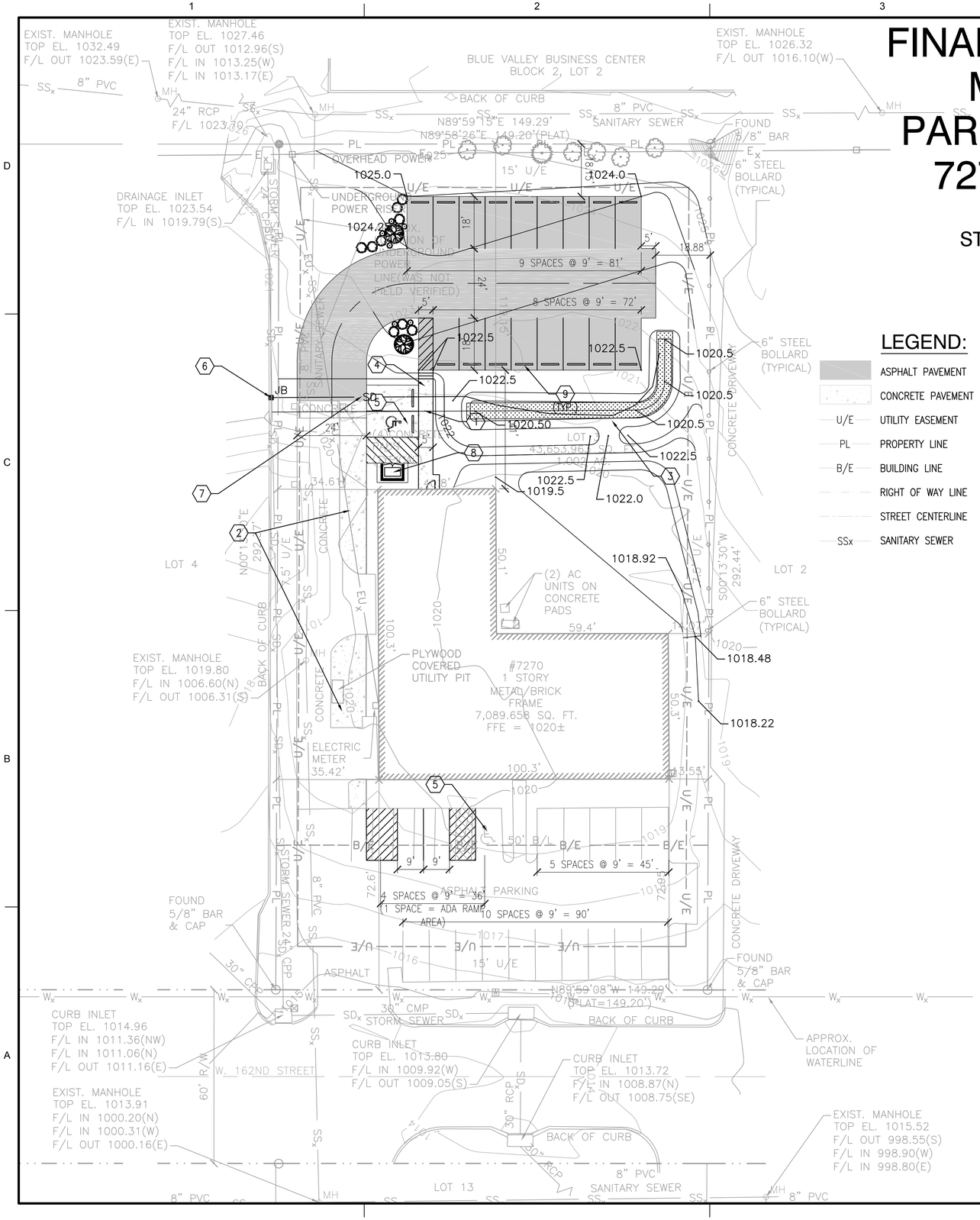

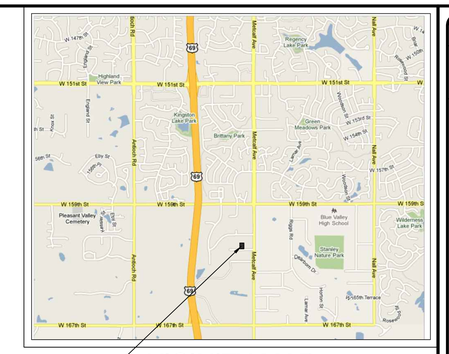

VICINITY MAP
NOT TO SCALE

LEGEND:

	ASPHALT PAVEMENT
	CONCRETE PAVEMENT
U/E	UTILITY EASEMENT
PL	PROPERTY LINE
B/E	BUILDING LINE
	RIGHT OF WAY LINE
	STREET CENTERLINE
SSx	SANITARY SEWER

LANDSCAPE MATERIALS:

EASTERN REDBUD	CERCIS CANADENSIS	2
ARBORVITAE – GLOBE	THUJA OCCIDENTALIS	9
SPIRAEA – GOLDFLAME	SPIRAEA X BUMALDA	6

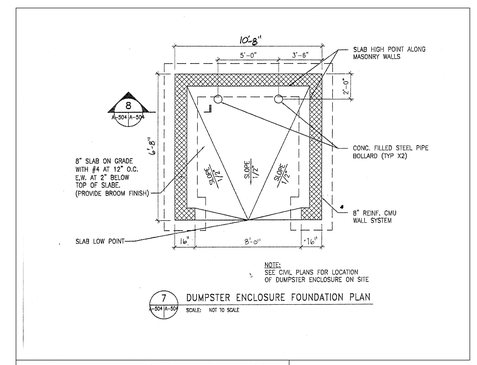

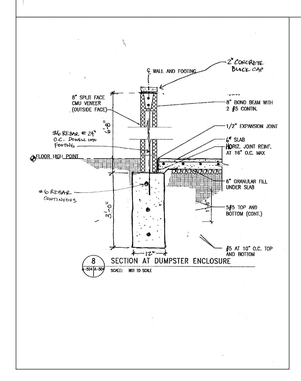

PLAN INFORMATION:

A.	EXISTING ZONING:	PRB–3J
	PROPOSED ZONING:	PRB–3J
B.	TOTAL LAND AREA:	
	EXISTING =	1.01 ACRES
	PROPOSED =	1.01 ACRES
C.	AREA DEDICATED TO STREET RIGHT–OF–WAY:	0 ACRES
D.	NET LAND AREA: EXISTING	1.01 ACRES
	PROPOSED	1.01 ACRES
E.	EXISTING BUILDING USES:	N/A
F.	EXISTING BUILDING HEIGHT:	N/A
G.	GROSS FLOOR AREA:	N/A
H.	TOTAL BUILDING COVERAGE:	N/A
	FLOOR AREA RATIO:	N/A
I.	GROSS DENSITY:	N/A
	NET DENSITY:	N/A
J.	PARKING QUANTITIES:	
	RATIO OF REQUIRED PARKING SPACES:	1 SPACE/250 SF
	PARKING SPACES REQUIRED (7,000 SF BLDG):	28
	EXISTING PARKING SPACES:	19
	PARKING SPACES PROVIDED:	37
	ADA PARKING SPACES REQUIRED:	2
	EXISTING ADA PARKING SPACES:	1
	ADA PARKING SPACES PROVIDED:	2
K.	COMMENCEMENT DATE:	2010
	COMPLETION DATE:	2011
L.	WRITTEN DESCRIPTION OF CHANGES:	N/A

SHEET NOTES:

1. PROPOSED 5–FT WIDE ADA ACCESSIBLE CONCRETE SIDEWALK.
2. PROPOSED DRIVEWAY WIDENING TO 24 FT.
3. PROPOSED BIOSWALE/BIORETENTION AREA.
4. PROPOSED CONCRETE STEPS.
5. PROPOSED RESTRIPING AREA FOR ADDITIONAL ADA PARKING SPACE.
6. PROPOSED JUNCTION BOX.
7. PROPOSED 4" PVC EXTENSTION FROM 4" PERFORATED PIPE.
8. RELOCATION OF EXISTING DUMPSTER WITH NEW ENCLOSURE. SEE DETAIL THIS SHEET.
9. PROPOSED PARKING BLOCK.

GENERAL NOTES:

1. NO LIGHTING PROVIDED.
2. NO STORMWATER RETENTION/DETENTION REQUIRED. SEE PRELIMINARY STORMWATER MANAGEMENT STUDY FOR MORE INFORMATION.
3. STORMWATER TREATMENT REQUIRED FOR ANY IMPROVEMENTS THAT INCLUDE AN INCREASE IN IMPERVIOUS AREA BEYOND THE OVERALL NET INCREASE OF 5,000 SF. IMPROVEMENTS INCLUDE A 7973 SF INCREASE IN IMPERVIOUS AREA.
4. NO CURB AND GUTTER REQUIRED ON NEW PARKING AREA.

ONE CALL KANSAS
316-687-2470
1-800-DIG-SAFE

20 10 0 20 40 60
GRAPHIC SCALE: 1" = 20'

N

MARK	DESCRIPTION	DATE	APPR.

DESIGNED BY: KSJ
DATE: 02/19/10
DWN BY: KSJ
CKD BY: .
SOLICITATION NO.:
SUBMITTED BY: E BAKER
CONTRACT NO.:
PLOT SCALE: 1:1
PLOT DATE: March 4, 2010
GRAPHIC SIZE: ANSI D
FILE NAME: MH_FDP.dwg
FILE NUMBER:

Mason&Hanger
A Day & Zimmermann Company

7270 PARKING LOT EXPANSION
PARKING LOT EXPANSION
FINAL DEVELOPMENT PLAN

SHEET IDENTIFICATION
C-100
SHEET OF 1

M:\From Lex\M&H-Renovation\CADD\Civil\MH_FDP.dwg
Mar 04, 2010
7:29pm